DO NOT SCALE

COMMERCIAL IN CONFIDENCE

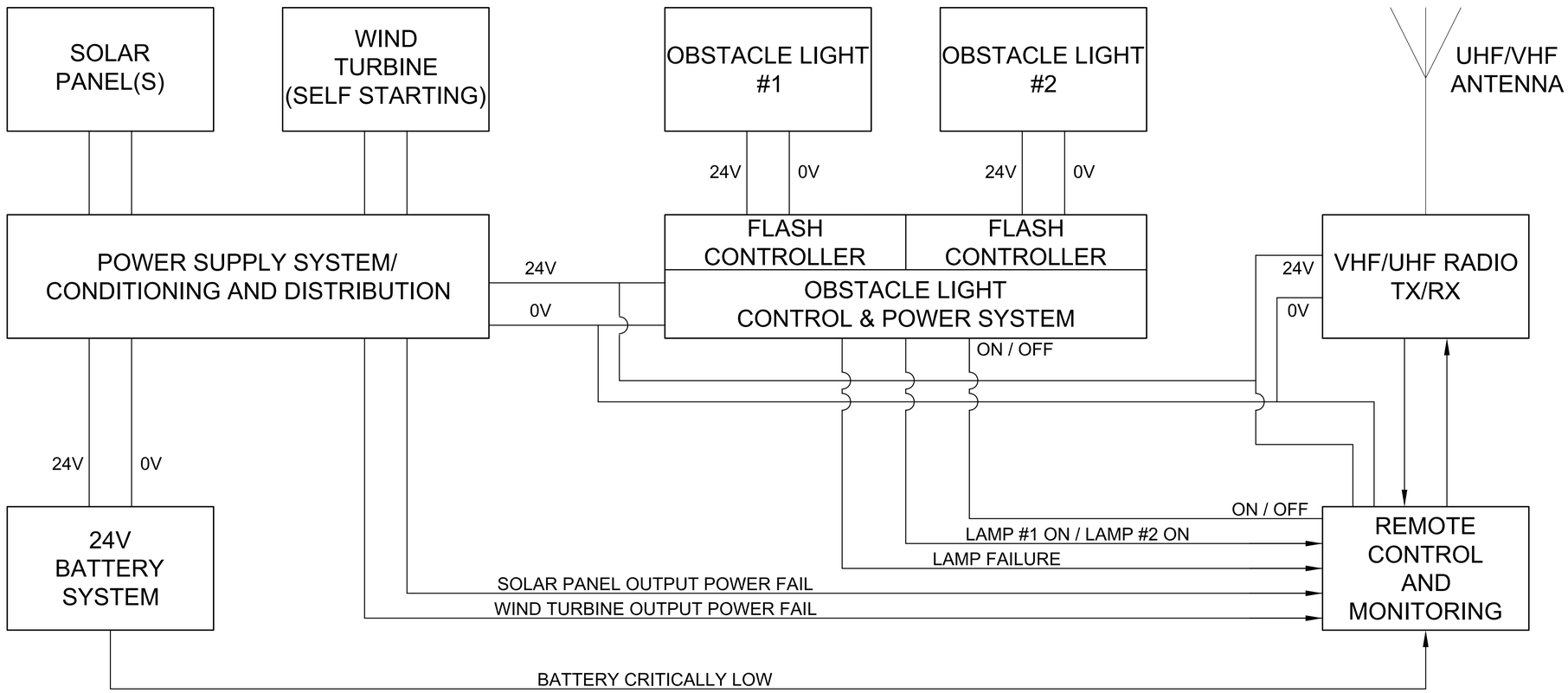

TYPE A - REMOTE OBSTACLE LIGHT
FUNCTIONAL SCHEMATIC

Rev.	Description	By	Date	Chk'd	Auth
	Tender	-	10.5.07		RDJ

Code	Purpose of issue	Rev	Date	Authorised

Client

DFID

Consultant

Atkins Limited ©
Consulting Engineers,
Woodcote Grove,
Ashley Road,
Epsom, Surrey, England,
KT18 5BW

ATKINS
www : http://www.atkinsglobal.com
Fax (01372) 740055
Tel. (01372) 726140

Project

St Helena Reference Design

Title

Airfield Details
Sheet 6

Scale at A1	Drawn	Checked	Authorised	Status
As Shown	BnH	RDJ	RDJ	T
	Date 9.5.07	Date 10.5.07	Date 10.5.07	

Drawing Number: 5048976 - CI - 01 - 2025

Rev: -

0 10 Millimetres 150

P:\GBEMF\Civil Infrastructure\Jobs\5048976 - ST HELENA REF DESIGN\09 Draw out\01 -Site\Home\Clout\5048976-CI-01-2025.dwg
May 11, 2007 - 4:06pm